25-75 GIVEN:

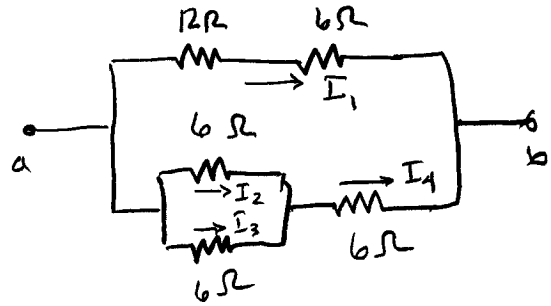

$V_{ab} = 12V$

FIND: R_{eq}, I IN EACH RESISTOR

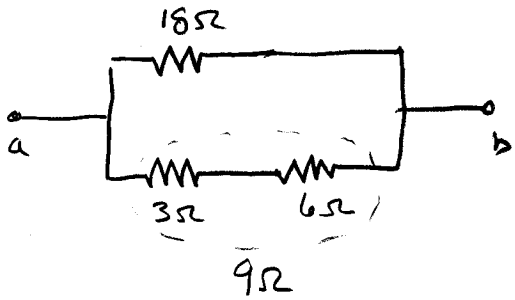

$$\frac{1}{6\Omega} + \frac{1}{6\Omega} = \frac{1}{R_{eq}'} = \frac{2}{6\Omega}$$

$$R_{eq}' = 3\Omega$$

$$\frac{1}{9\Omega} + \frac{1}{18\Omega} = \frac{1}{R_{eq}} = \frac{3}{18\Omega}$$

$$R_{eq} = \boxed{6\,\Omega}$$

$$I_{NET} = \frac{V_{ab}}{R_{eq}} = \frac{12V}{6\Omega} = \boxed{2A}$$

$$2A = I_1 + I_4 \qquad I_1 = \frac{12V}{18\Omega} = \boxed{\frac{2}{3}\,A.}$$

$$I_4 = 2A - I_1 = 2A - \frac{2}{3}A = \boxed{\frac{4}{3}\,A}$$

$$I_2 + I_3 = I_4 = 2I_2 \Rightarrow I_2 = \frac{I_4}{2} = \boxed{\frac{2}{3}A}$$

$$I_3 = \boxed{\frac{2}{3}\,A}$$