27-66 GIVEN: TOROID - LIQ O_2 $\chi = 4 \times 10^{-3}$

$N = 2000$ TURNS

$I = 15A$

$\bar{r} = 20\,cm$

$A = \pi(.006\,m)^2$

FIND: $|\vec{M}|, |\vec{B}|$, % CHANGE IN B DUE TO O_2

WITH VACCUUM $|\vec{B}_{APP}| = \frac{\mu_0 I N}{2\pi r} = \frac{(2\times10^{-7}\frac{N}{A^2})(15A)2000}{.2\,m} = 3.0 \times 10^{-2}\,T$

$$|\vec{M}| = \chi \frac{B_{APP}}{\mu_0} = (4\times10^{-3})\frac{3.0\times10^{-2}\,T}{4\pi\times10^{-7}\frac{N}{A^2}}$$

$$= \boxed{95.4\ \frac{A}{m}}$$

$$|\vec{B}| = |\vec{B}_{APP}| + \mu_0|\vec{M}|$$

$$= 3.0\times10^{-2}\,T + (4\pi\times10^{-7}\frac{N}{A^2})(95.4\frac{A}{m})$$

$$= 3.012\times10^{-2}\,T$$

$$\%\ \text{CHANGE} = \frac{.012}{3.0}\times100\% = \boxed{0.4\%}$$

3-0235 — 50 SHEETS — 5 SQUARES
3-0236 — 100 SHEETS — 5 SQUARES
3-0237 — 200 SHEETS — 5 SQUARES
3-0137 — 200 SHEETS — FILLER
COMET

27-90 GIVEN:

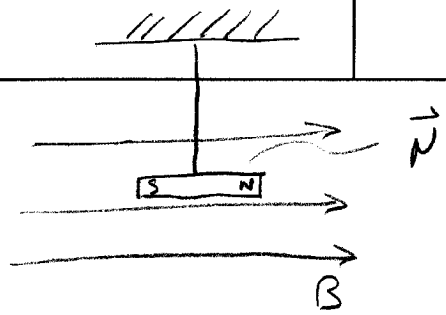

SHOW: SHM ABOUT EQUILIBRIUM WITH $f = \frac{1}{2\pi}\sqrt{\frac{\mu B}{I}}$

$$\vec{\tau} = \vec{\mu} \times \vec{B} \Rightarrow |\tau| = \mu B \sin\theta = -I\alpha$$

RESTORING TORQUE

$$I\frac{d^2\theta}{dt^2} + \mu B \sin\theta = 0$$

θ - SMALL

$$I\frac{d^2\theta}{dt^2} + \mu B\,\theta = 0$$

$$\frac{d^2\theta}{dt^2} + \frac{\mu B}{I}\theta = 0$$

$$\theta = \theta_0 \cos(\omega t + \phi)$$

$$\frac{d\theta}{dt} = -\theta_0 \omega \sin(\omega t + \phi)$$

$$\frac{d^2\theta}{dt^2} = -\theta_0 \omega^2 \cos(\omega t + \phi)$$

$$-\cancel{\theta_0}\omega^2 \cancel{\cos(\omega t + \phi)} + \frac{\mu B}{I}\cancel{\theta_0}\cancel{\cos(\omega t + \phi)} = 0$$

$$\omega^2 = \frac{\mu B}{I}$$

$$\omega = \sqrt{\frac{\mu B}{I}}$$

$$f = \frac{\omega}{2\pi} = \frac{1}{2\pi}\sqrt{\frac{\mu B}{I}}$$

3-0235 — 50 SHEETS — 5 SQUARES
3-0236 — 100 SHEETS — 5 SQUARES
3-0237 — 200 SHEETS — 5 SQUARES
3-0137 — 200 SHEETS — FILLER
COMET

27-97 GIVEN

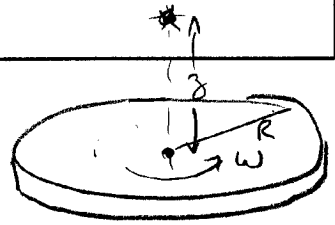

NON CONDUCTING DISK
σ = CHARGE DENSITY
ω = ROT SPEED

FIND: dI FOR STRIP OF WIDTH dr
B AT CENTER OF DISK
B AT z

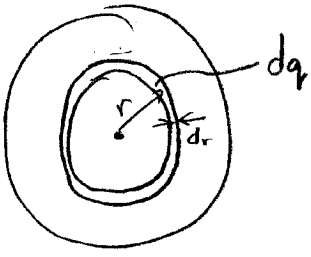

$s = r\theta$
$v = r\omega$

$$dq = \sigma\, 2\pi r\, dr \qquad T = \frac{2\pi}{\omega}$$

$$dI = \frac{dq}{T} = \frac{\sigma\, \cancel{2\pi} r\, dr}{\cancel{2\pi}/\omega}$$

$$= \omega \sigma r\, dr$$

FOR A RING $\rightarrow B = \dfrac{\mu_0 I}{2r} \Rightarrow dB = \dfrac{\mu_0\, dI}{2r}$

$$dB = \frac{\mu_0}{2}\frac{\omega\sigma \cancel{r}\, dr}{\cancel{r}} = \frac{1}{2}\mu_0\omega\sigma\, dr$$

$$B = \frac{1}{2}\mu_0\omega\sigma\int_0^R dr = \frac{1}{2}\mu_0\omega\sigma R$$

AT A DISTANCE z $\quad B = \dfrac{\mu_0}{2}\dfrac{I r^2}{(z^2+r^2)^{3/2}}$

$$dB = \frac{\mu_0}{2}\frac{dI\, r^2}{(z^2+r^2)^{3/2}} = \frac{\mu_0}{2}\frac{r^2\, \omega\sigma r\, dr}{(z^2+r^2)^{3/2}}$$

$$B = \frac{\mu_0\omega\sigma}{2}\int_0^R \frac{r^3\, dr}{(z^2+r^2)^{3/2}}$$

TI

$$= \frac{\mu_0\omega\sigma}{2}\left(\frac{R^2+2z^2}{\sqrt{R^2+z^2}} - 2|z|\right)$$

3-0235 — 50 SHEETS — 5 SQUARES
3-0236 — 100 SHEETS — 5 SQUARES
3-0237 — 200 SHEETS — 5 SQUARES
3-0137 — 200 SHEETS — FILLER
COMET