Name _____ SP222 CDR Tucholski
Section_____ Quiz Feb 2010

A very long ~~continuous~~ insulating cylinder has a uniform charge density, ρ, and dimensions as shown. We want to use Gauss' Law to determine the electric field inside the cylinder near the middle at the x.

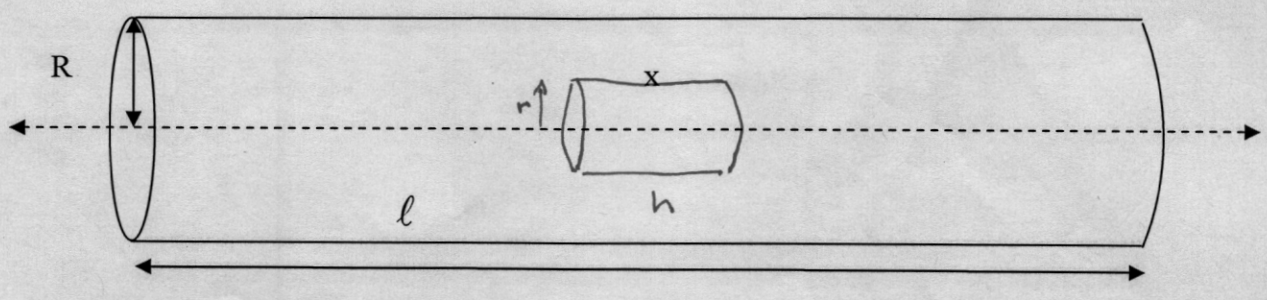

a. Sketch a Gaussian surface that will allow you to find the electric field inside the cylinder. (2 points)

b. Label the dimensions of your Gaussian surface. (2 points)

c. Gauss's Law says: $\Phi_E = \oint \vec{E} \cdot d\vec{A} = \frac{Q_{inside}}{\varepsilon_0}$ If you have picked a proper Gaussian surface, the integral part (left side) of Gauss's law is a simple product. What is the integral part of Gauss's law in terms of the unknown electric field magnitude, E, the charge density, ρ, and any appropriate dimensions on your diagram? (2 points)

$$\Phi = E\, 2\pi r h$$

d. In terms of the charge density, ρ, and any appropriate dimensions on your diagram, how much charge is inside your Gaussian surface? Divide this charge by the permittivity of free space. (2 points)

$$\frac{Q_{IN}}{\epsilon_0} = \frac{\rho \pi r^2 h}{\epsilon_0}$$

e. Now equate parts c and d and solve for the unknown electric field magnitude. (2 points)

$$E(2\cancel{\pi} r \cancel{h}) = \frac{\rho \cancel{\pi} r^2 \cancel{h}}{\epsilon_0}$$

$$E = \frac{\rho r^{\cancel{2}}}{2\cancel{r}\epsilon_0} = \frac{\rho r}{2\epsilon_0}$$

Extra Credit: The Buffalo Bills lost four straight super bowls causing people to joke that "Bills" stands for Boy I Love Losing Superbowls. In what years did the losses occur?