Name KEY SP222 Exam II
(put name on every page)

Instructions:

1. **Complete problem one and 3 of the 4 remaining problems. Put an x in box for the problems you want me to grade.**
2. **You can use the gouge card you prepared and your calculator.**
3. **Put your name on every page.**
4. **Show all work.**

1. (15 points) A non-conducting charged stick has a non-uniform positive linear charge density

$$\lambda(x) = \left(5.00\frac{\mu C}{m^2}\right)x$$

and **length 1.00 m** as shown below. The charged stick is set on the x axis with the left end on the origin and the x coordinate as shown.

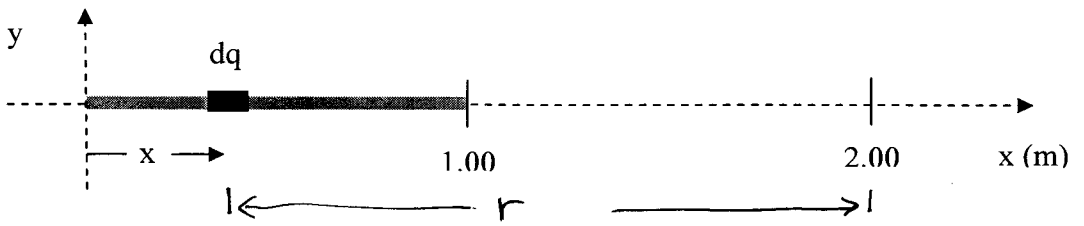

1845

a. (3) Write an expression for the point-like charge element dq (you can drop the units if you like).

$$dq = \lambda\, dx = 5x\, dx$$

dq (-1)
l (-1.5)
WRONG λ (-1.5)

b. (7) Relative to zero potential at x = infinity, what is the electric potential at x = 2.00 m? (be sure to tell me what you put in your calculator in case your final answer is wrong)

WRONG r (-3) $dV = \frac{k\,dq}{r} = \frac{k(5x\,dx)}{2-x}$ No μ (-1)

$V \sim \frac{1}{r^2}$ (-4)

LIMITS (-3) $V = k\int_0^1 \frac{5x\,dx}{2-x} = k(1.93)\frac{\mu C}{m^2}\,m$

2ND FAULT (-1)

CALC ONLY (-6/5) $= \left(9.0\times10^9 \frac{N\cdot m^2}{C^2}\right)\left(1.93\times10^{-6}\right)\frac{C}{m} = 1.74\times10^4\ V$

c. (5) A 3.00 μC point charge is placed at x = 2.00 m. What is the potential energy of this charge?

$\frac{1}{2}QV$ (-2) $U = qV = (3\mu C)(1.74\times10^4 V) = 0.0521\ J$

$\frac{kq^2}{r}$ (-3)

1850

Grade this problem ☒

Name KEY SP222 Exam II

(put name on every page)

2. (25 points) A solid iron rod of **radius 0.500 cm** and length 40 cm has an electric potential of 20 volts from one end to the other. ($\rho_{iron} = 10.0 \times 10^{-8}\ \Omega$-m at 20 C, $\alpha = 5.00 \times 10^{-3}\ K^{-1}$)

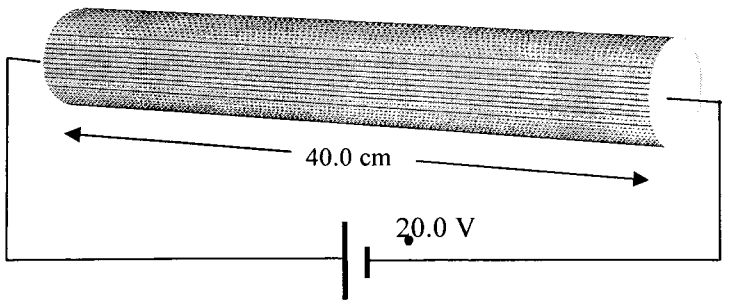

a. (4) What is the bar's resistance?

$$R = \frac{\rho l}{A} = \frac{(10\times10^{-8}\,\Omega\cdot m)(.4m)}{\pi(.5\times10^{-2}m)^2}$$

$$= 5.09\times10^{-4}\,\Omega$$

$$A = \pi(.5\times10^{-2}m)^2 = 7.85\times10^{-5}m^2$$

b. (4) What is the magnitude of the current density vector in the bar?

$$I = \frac{V}{R} = \frac{20V}{5.09\times10^{-4}\,\Omega} = 3.9\times10^{3}\,A$$

$$J = \frac{I}{A} = \frac{3.9\times10^{3}A}{\pi(.5\times10^{-2}m)^2} = 5.0\times10^{7}\,\frac{A}{m^2}$$

c. (4) What is the magnitude and direction of the uniform electric field in the bar?

$$V = El \Rightarrow E = \frac{2V}{.4m} = 5\,\frac{V}{m}$$

$$E = \rho J = (10\times10^{-8}\,\Omega\cdot m)(5\times10^{7}\,\frac{A}{m^2}) = 5\,\frac{V}{m}$$

d. (4) If the number density of free electrons in the bar is 170 electrons/nm^3, what is the drift speed for the electrons in the bar?

$$J = n v_d e = 5.0\times10^{7}\,\frac{A}{m^2} = 170\,\frac{e}{nm^3}\left(\frac{1nm}{10^{-9}m}\right)^3 v_d\,(1.6\times10^{-19}C)$$

$$v_d = 1.84\times10^{-3}\,m/s$$

e. (4) What is the average time between collisions, τ?

$$\rho = \frac{m_e}{ne^2\tau} = \frac{9.1\times10^{-31}kg}{170\,\frac{e}{nm^3}(10^{27}\,\frac{nm^3}{m^3})(1.6\times10^{-19}C)^2\,\tau} = 10\times10^{-8}\,\Omega\cdot m$$

$$\tau = 2.1\times10^{-15}\,s$$

f. (5) The current in the bar causes the bar temperature to heat up to 220 C. What is the new resistance for the bar?

$$R = R_0(1+\alpha(T-T_0)) = 5.09\times10^{-4}\,\Omega(1+5\times10^{-3}K^{-1}(200K))$$

$$= 1.02\times10^{-3}\,\Omega$$

1905

Grade this problem

Name KEY SP222 Exam II
(put name on every page)

3. (25 points)Three initially uncharged capacitors are connected to a battery in the circuit shown below.

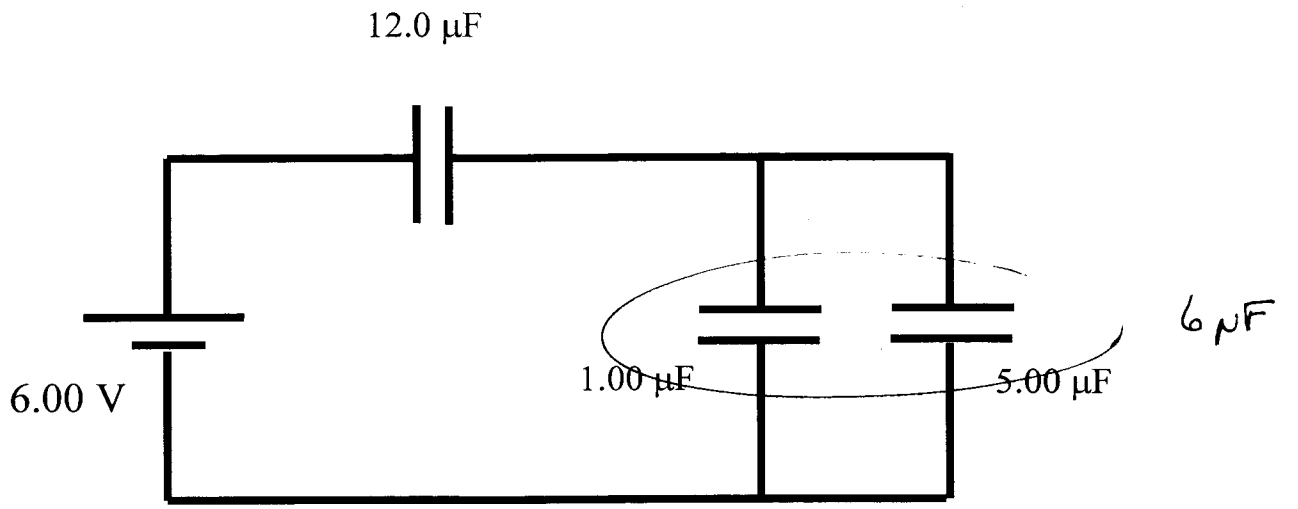

a. (5) What single capacitor would equivalently replace the three capacitors?

$$\frac{1}{C_{eq}} = \frac{1}{12\mu F} + \frac{1}{6\mu F} = \frac{3}{12\mu F} \Rightarrow C_{eq} = 4\mu F$$

b. (5) What is the charge on the 12.0 μF capacitor?

$$Q_{12} = C_{eq}V = (4\mu F)(6V) = 24\mu C$$

c. (5) What is the voltage across the 12.0 μF capacitor?

$$V_{12} = \frac{Q_{12}}{C_{12}} = \frac{24\mu C}{12\mu F} = 2V$$

d. (5) What is the charge on the 1.00 μF capacitor?

$$Q_1 = C_1V_1 = (1\mu F)(6V - 2V) = 4\mu C$$

e. (5) What is the charge on the 5.00 μF capacitor?

$$Q_5 = C_5V_5 = (5\mu F)(4V) = 20\mu C$$

Grade this problem

Name KEY SP222 Exam II
(put name on every page)

1910

4. (25 points) Given the circuit as sketched

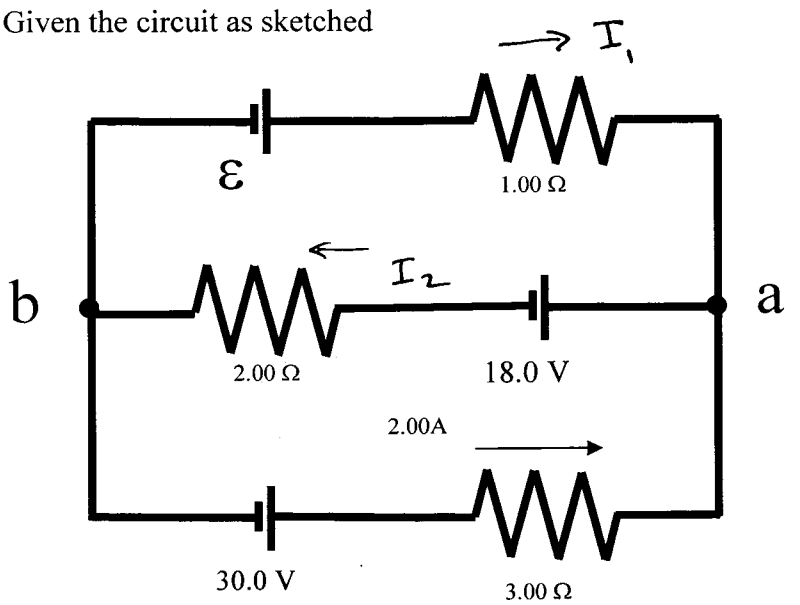

a. (5) What is the current in the 2.00 Ω resistor?

$30V - 3\Omega(2A) - 18V - 2\Omega(I_2) = 0$

$30V - 6V - 18V = 2\Omega I_2 = 6V \Rightarrow I_2 = 3A$

b. (4) What is the current in the 1.00 Ω resistor?

$I_1 + 2A = I_2 = 3A$ $I_1 = 1A$

c. (5) What is the electromotive force for the battery in the upper branch of the circuit?

$30V - 6V + (1A)(1\Omega) - \mathcal{E} = 0$

$25V - \mathcal{E} = 0 \Rightarrow \mathcal{E} = 25V$

d. (5) How much power is supplied by each battery?

$P = VI$ $(30V)(2A) = 60W$

$(18V)(-3A) = -54W$ $P_{NET} = 31W$

$(25V)(1A) = 25W$

e. (5) How much power is dissipated by each resistor?

$P = I^2R$ $(2A)^2(3\Omega) = 12W$

$(3A)^2(2\Omega) = 18W$ $P_{NET} = 31W$

$(1A)^2(1\Omega) = 1W$

f. (1) Is energy conserved? Explain?

Yes $P_{BATT\ SUPP} = P_{RESIS\ DISIPATED}$

Grade this problem

1915

Name KEY SP222 Exam II

(put name on every page)

5. (25 points) Given the circuit sketched with R = 1.00 ~~MΩ~~ kΩ and C = 4.00 μF. $\mathcal{E} = 12V$

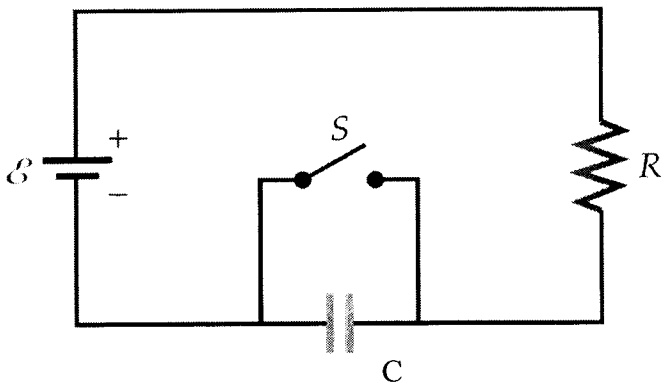

a. (4) What is the time constant for this circuit once the switch is open?

$$\tau = RC = (1\,k\Omega)(4.00\,\mu F) = 4\,ms$$

DON'T KNOW τ (-3)

b. (4) If the switch is opened at time t = 0 with the capacitor initially uncharged, what is the initial current through the resistor?

$$I_0 = \frac{\mathcal{E}}{R} = \frac{12V}{1\,k\Omega} = 12\,mA$$

c. (4) If the switch is opened at time t = 0 with the capacitor initially uncharged, what will be the current through the resistor when one time constant has passed?

$$I = I_0 e^{-t/\tau} = (12\,mA)e^{-1} = 4.4\,mA$$

d. (4) What will be the final charge on the capacitor after 5 time constants have elapsed?

$$Q = CV = (4\,\mu F)(12V) = 48\,\mu C$$

e. (5) Sketch the charge on the capacitor over time after ~~taking~~ OPENING the switch ~~to position A~~.

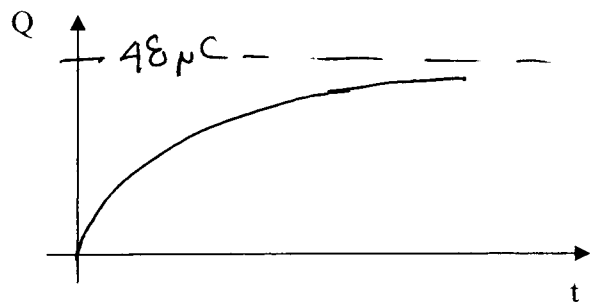

f. (4) What will be the total amount of energy stored in the capacitor after the switch has been ~~in the A position~~ OPEN for a long time?

$$U = \frac{1}{2}CV^2 = \frac{1}{2}(4\,\mu F)(12V)^2 = 2.88\times10^{-4}\,J$$

$$U = \frac{1}{2}\frac{Q^2}{C} = \frac{1}{2}\frac{(48\,\mu C)^2}{4\,\mu F} = 2.88\times10^{-4}\,J$$

Grade this problem

1920