Interactive Problem Set 18, SP212 Spring 2013

Topic: Multiloop Circuits, Kirchhoff's Voltage Law (KVL), and Kirchhoff's Current Law (KCL)

---

1. In the circuit, the battery has emf $\mathscr{E}$ = 10.0 V, R_1 = 1.00 Ω, R_2 = 2.00 Ω, R_3 = 3.00 Ω, R_4 = 4.00 Ω.

(a) Find the current through each resistance.

(b) Find the potential difference between *b* and *c*.

(c) Find the potential difference between *a* and *c*.

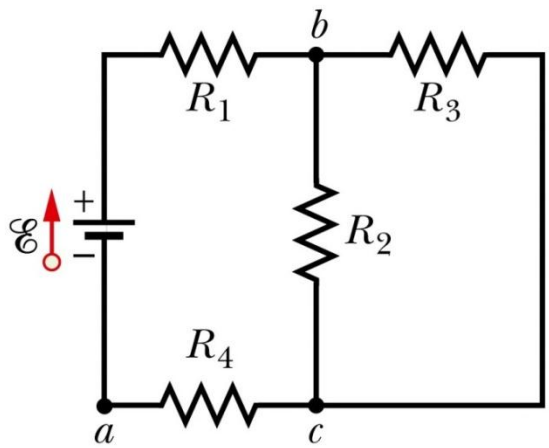

2. In the circuit R_1 = 80 Ω, R_2 = 47 Ω, and the ideal batteries have emfs $\mathscr{E}_1$ = 6.0 V, $\mathscr{E}_2$ = 5.0 V, and $\mathscr{E}_3$ = 4.0 V.

(a) Find the current in R_1

(b) Find the current in R_2

(c) Find the potential difference between points *a* and *b*.

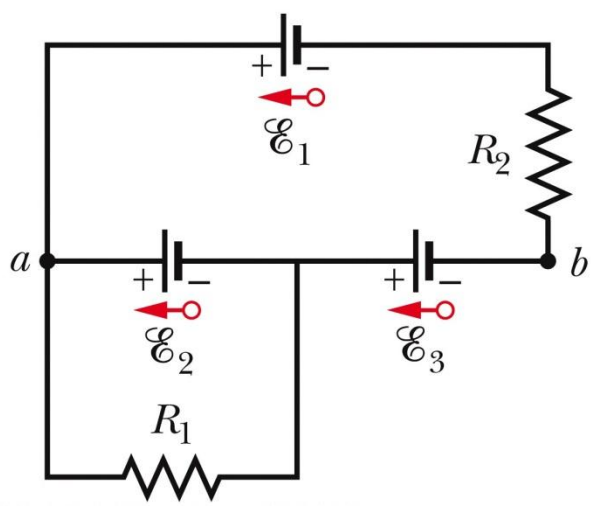

Reading for next class: Chapter 27