Interactive Problem Set 19, SP212 Spring 2013

Topic: Topic: Multiloop Circuits, Kirchhoff's Voltage Law (KVL), and Kirchhoff's Current Law (KCL)

---

1. In the circuit, $\mathscr{E}_1$ = 6.00 V, $\mathscr{E}_2$ = 12.0 V, R_1 = 100 Ω, R_2 = 200 Ω, and R_3 = 300 Ω. One point of the circuit is grounded (V = 0).

a. What are the (i) size and (ii) direction (up or down) of the current through R_1?
b. What are the (i) size and (ii) direction (left or right) of the current through R_2?
c. What are the (i) size and (ii) direction (left or right) of the current through R_3?
d. What is the electric potential at point A.

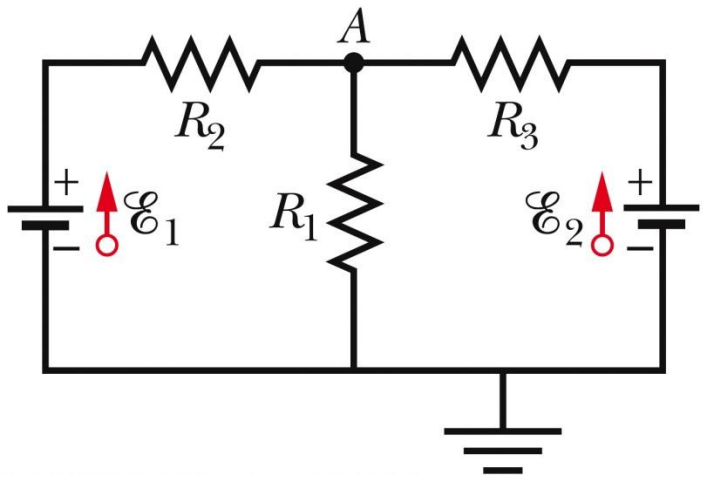

The following applies to the next three problems: In a simple circuit using a 240 V power source or "emf", a single 100-W bulb dissipates 100 W. The figure below shows two such bulbs connected in (i) series and (ii) parallel.

2. Suppose I construct circuit with this power source and two such bulbs in parallel. Find

a. the current through each bulb.
b. the power dissipated in each bulb.
c. the electric potential change across each bulb.

3. Suppose I construct circuit with this power source and two such bulbs in series. What is

d. the current through each bulb.
e. the power dissipated in each bulb.
f. the electric potential change across each bulb.

4. How does the brightness of the bulbs in the previous problems compare with each other and the orginal simple circuit?

Reading for next class: Chapter 27