Solve all of the following problems.

1. For an electric field given by $\mathbf{E} = (3x^2 + 5x^3)\ \mathbf{i}$ N/m, what is the potential difference between a point at the origin and a point located at $x = 2.0$ m?

2. In the circuit shown, what is the charge on the $3.0\,\mu$F capacitor?

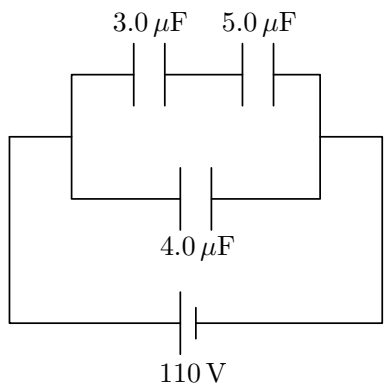

3. (*problem removed*)

4. In the network shown, what is the equivalent resistance between points A and B?

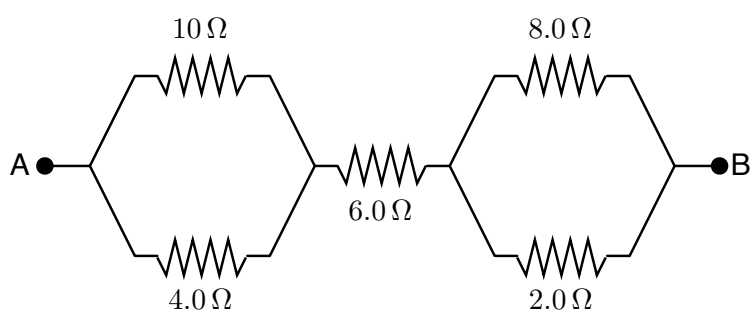

5. In the circuit shown, what are the values of I_1 and I_2?

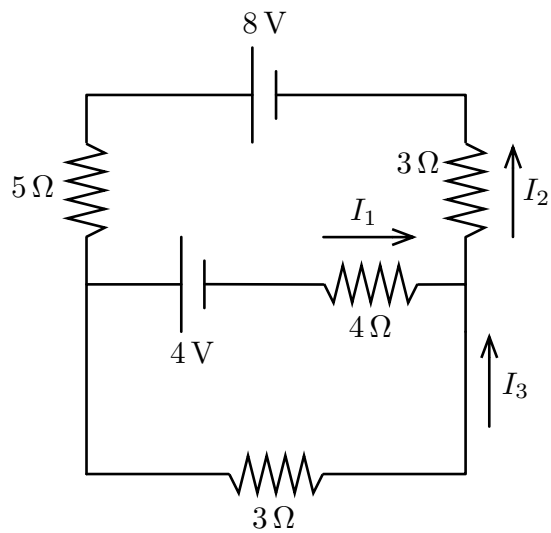

6. A U-shaped conductor of width $l = 0.08$ m is connected by a conducting bar as shown in the figure. A uniform magnetic field of 0.2 T exists everywhere in the region and is directed out of the page. If the bar is moved to the right at a constant speed $|\mathbf{v}| = 2.0$ m/s, what is the magnitude and direction of the induced current through the bar? Assume the total circuit has a resistance of 2.0 Ω.

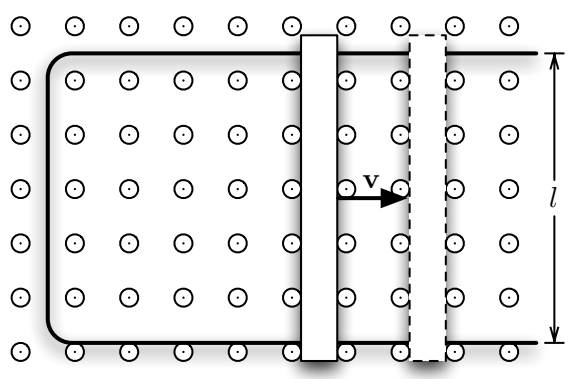

7. At some instant a -0.020 C point charge with a velocity $\mathbf{v} = 1.25 \times 10^3\ \mathbf{i}$ m/s is at a position where there is a magnetic field $\mathbf{B} = 0.15\ \mathbf{k}$ T and an electric field $\mathbf{E} = 150\ \mathbf{i}$ N/C. What is the total force on the particle (direction and magnitude)?

8. In the figure below, two long, parallel, current-carrying wires are separated by one meter. What are (a) the magnetic field midway between the two wires, and (b) the force on a 3 m length of wire 1 due to wire 2?

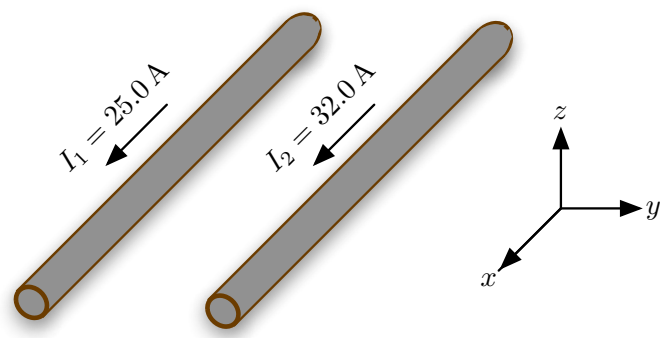

9. The filament of a light bulb is made of tungsten wire 7.5×10^{-3} m in length and 4.0×10^{-4} m in radius. When the bulb is not glowing, the filament is at room temperature, 20°C. When glowing, the filament reaches a temperature of 1750°C. Tungsten's resistivity $\rho = 5.6 \times 10^{-8}\ \Omega\cdot$m and its temperature coefficient $\alpha = 0.0045\ (°\text{C})^{-1}$ at 20°C. What is the resistance of the filament when glowing?

10. A generator consists of a circular coil of wire rotating in a uniform magnetic field of strength 1.6 T. The coil has a radius of 0.3 m and there are 100 turns of wire. How fast must the coil rotate to produce 110 V peak emf?

Bonus (3 points)

Beginning with the setup in the figure, use the Biot-Savart Law to derive the following expression for the magnetic field near a segment of current-carrying wire:

$$B = \frac{\mu_0}{4\pi}\frac{I}{a}(\sin\theta_1 + \sin\theta_2).$$
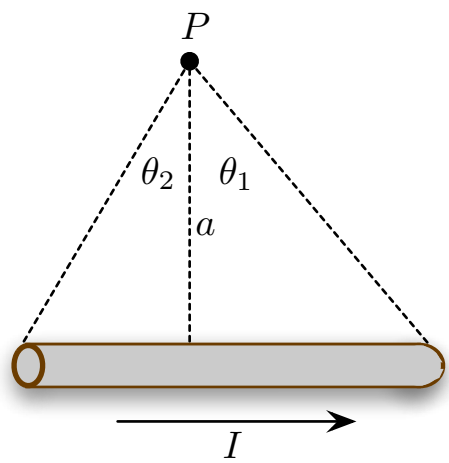
Note that this is different than the example given in Serway. What is the difference?