Solve all of the following problems.

1. For an electric field given by $\mathbf{E} = (3x^2 + 5x^3)\,\mathbf{i}$ N/m, what is the potential difference between a point at the origin and a point located at $x = 2.0$ m?

   Solution

   The potential difference is given by

$$\begin{aligned}
\Delta V = V_{\mathsf{b}} - V_{\mathsf{a}} &= \int_{\mathsf{a}}^{\mathsf{b}} \mathbf{E} \cdot d\mathbf{s} \\
&= \int_{\mathcal{O}}^{x} E_x dx \\
&= \int_0^2 \left(3x^2 + 5x^3\right) dx \\
&= 3\int_0^2 x^2 dx + 5\int_0^2 x^3 dx \\
&= x^3\Big|_0^2 + \frac{5}{4}x^4\Big|_0^2 \\
&= 8 + 20 \\
&= \boxed{28\,\mathrm{V}}.
\end{aligned}$$

2. In the circuit shown, what is the charge on the $3.0\,\mu$F capacitor?

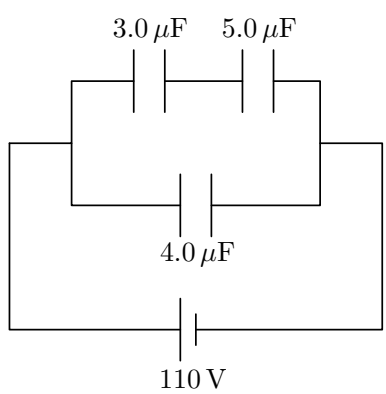

   Solution

   There is a 110 V drop across the entire system of capacitors, which means a 110 V drop across the two

capacitors in series. The charges on those two will be identical and given by

$$\begin{aligned} Q &= C_{\text{eq}}\Delta V \\ &= \frac{C_1 C_2}{C_1 + C_2} \\ &= \frac{(3\times 10^{-6})(5\times 10^{-6})}{3\times 10^{-6} + 5\times 10^{-6}} 110 \\ &= \boxed{0.2\,\text{mC}}. \end{aligned}$$

3. (*problem removed*)

4. In the network shown, what is the equivalent resistance between points A and B?

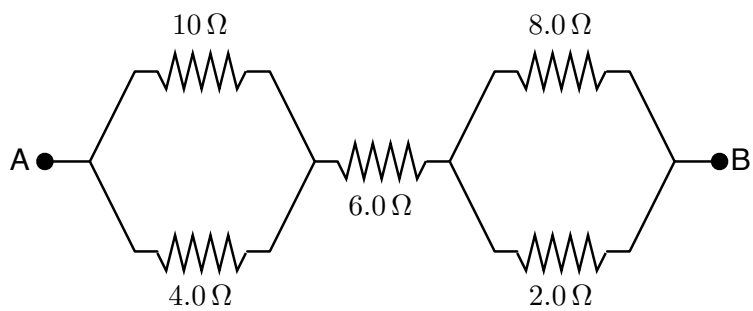

Solution

The equivalent resistance is given by

$$\begin{aligned} R_{\text{eq}} &= \frac{R_1 R_2}{R_1 + R_2} + R_3 + \frac{R_4 R_5}{R_4 + R_5} \\ &= \frac{40}{14} + 6 + \frac{16}{10} \\ &= \boxed{10.5\,\Omega}. \end{aligned}$$

5. In the circuit shown, what are the values of I_1 and I_2?

Solution

The appropriate Kirchhoff's Rules equations are

$$\begin{aligned} I_2 &= I_1 + I_3 \\ 8 - 5(I_1 + I_3) - 3I_3 - 3(I_1 + I_3) &= 0 \\ 4 - 3I_3 + 4I_1 &= 0. \end{aligned}$$

These give

$$\begin{aligned} I_1 &= \boxed{-0.29\,\text{A}}; \\ I_2 &= \boxed{0.65\,\text{A}}; \\ I_3 &= 0.94\,\text{A}. \end{aligned}$$

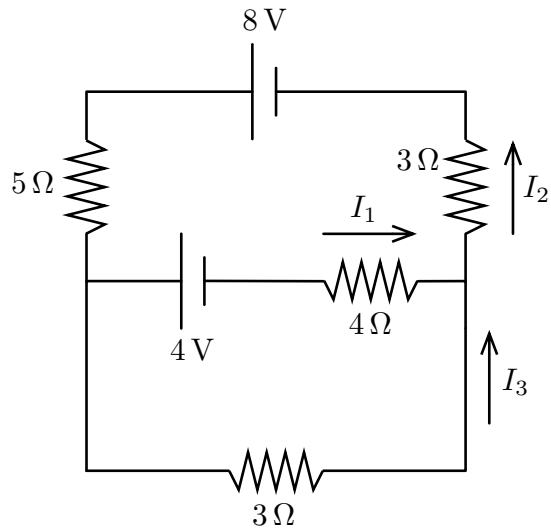

6. A U-shaped conductor of width $l = 0.08$ m is connected by a conducting bar as shown in the figure. A uniform magnetic field of 0.2 T exists everywhere in the region and is directed out of the page. If the bar is moved to the right at a constant speed $|\mathbf{v}| = 2.0$ m/s, what is the magnitude and direction of the induced current through the bar? Assume the total circuit has a resistance of 2.0 Ω.

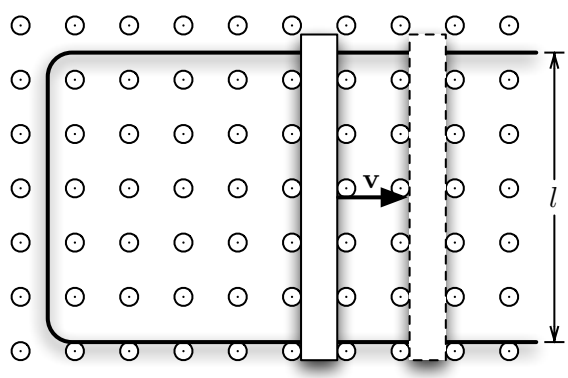

Solution

The magnitude of the $\boxed{\text{clockwise}}$ induced current in the circuit is given by

$$\begin{aligned} I &= \frac{\mathcal{E}_{\text{induced}}}{R} \\ &= \frac{Blv}{R} \\ &= \frac{(0.2)(0.08)(2)}{2} \\ &= \boxed{16\,\text{mA}}. \end{aligned}$$

7. At some instant a -0.020 C point charge with a velocity $\mathbf{v} = 1.25 \times 10^3\ \mathbf{i}$ m/s is at a position where there is a magnetic field $\mathbf{B} = 0.15\ \mathbf{k}$ T and an electric field $\mathbf{E} = 150\ \mathbf{i}$ N/C. What is the total force on the particle (direction and magnitude)?

   Solution

   The force on the charged particle is given by

$$\begin{aligned}\mathbf{F} &= q(\mathbf{E} + \mathbf{v} \times \mathbf{B}) \\ &= (-0.020)(150)\mathbf{i} + (-0.020)(1.25 \times 10^3)(0.15)(\mathbf{i} \times \mathbf{k}) \\ &= \boxed{-3\mathbf{i} + 3.75\mathbf{j}}.\end{aligned}$$

8. In the figure below, two long, parallel, current-carrying wires are separated by one meter. What are (a) the magnetic field midway between the two wires, and (b) the force on a 3 m length of wire 1 due to wire 2?

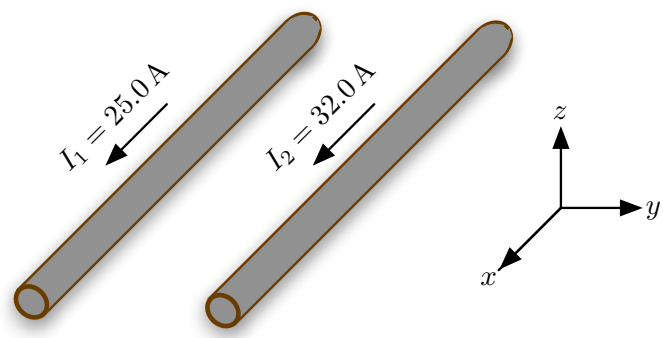

   Solution

   The magnetic field midway between the two wires is given by

$$\begin{aligned}\mathbf{B} &= \mathbf{B}_1 + \mathbf{B}_2 \\ &= \frac{\mu_0 I_1}{2\pi R_1}\mathbf{k} - \frac{\mu_0 I_2}{2\pi R_2}\mathbf{k} \\ &= \frac{\mu_0}{\pi d}(I_1 - I_2)\mathbf{k} \\ &= (4 \times 10^{-7})(25 - 32)\mathbf{k} \\ &= \boxed{-2.8\,\mu\mathrm{T}\ \mathbf{k}}.\end{aligned}$$

The magnitude of the $\boxed{\text{attractive}}$ force on a 3 m length of wire 1 due to the magnetic field of wire 2 is

$$\begin{aligned}|\mathbf{F}| &= |I_1\hat{\mathbf{L}} \times \mathbf{B}| \\ &= I_1 L B \sin\theta \\ &= \frac{\mu_0 I_1 I_2 L \sin\theta}{2\pi d} \\ &= (2\times10^{-7})(25)(32)(3)\left(\sin\frac{\pi}{2}\right) \\ &= \boxed{480\,\mu\text{N}}.\end{aligned}$$

9. The filament of a light bulb is made of tungsten wire 7.5×10^{-3} m in length and 4.0×10^{-4} m in radius. When the bulb is not glowing, the filament is at room temperature, 20°C. When glowing, the filament reaches a temperature of 1750°C. Tungsten's resistivity $\rho = 5.6\times10^{-8}$ Ω·m and its temperature coefficient $\alpha = 0.0045\ (°\text{C})^{-1}$ at 20°C. What is the resistance of the filament when glowing?

   Solution

   The resistance of the filament when glowing is given by

$$\begin{aligned}R &= \frac{\rho l}{A} \\ &= \frac{\rho_0[1+\alpha(T-T_0)]l}{\pi r^2} \\ &= \frac{(5.6\times10^{-8})[1+(0.0045)(1750-20)](7.5\times10^{-3})}{\pi(4.0\times10^{-4})^2} \\ &= \boxed{7.3\ \text{m}\Omega}.\end{aligned}$$

10. A generator consists of a circular coil of wire rotating in a uniform magnetic field of strength 1.6 T. The coil has a radius of 0.3 m and there are 100 turns of wire. How fast must the coil rotate to produce 110 V peak emf?

    Solution

    The emf induced in a conducting coil of N turns and area A rotating with angular speed ω about its diameter in a magnetic field of strength B is given by

$$\mathcal{E} = NAB\omega.$$

    Solving for ω we have

$$\begin{aligned}\omega &= \frac{\mathcal{E}}{NAB} \\ &= \frac{\mathcal{E}}{N\pi r^2 B} \\ &= \frac{110}{(100)\pi(0.3)^2(1.6)} \\ &= \boxed{2.43\ \text{rad/s}}.\end{aligned}$$

Bonus (3 points)

Beginning with the setup in the figure, use the Biot-Savart Law to derive the following expression for the magnetic field near a segment of current-carrying wire:

$$B = \frac{\mu_0}{4\pi}\frac{I}{a}(\sin\theta_1 + \sin\theta_2).$$

Note that this is different than the example given in Serway. What is the difference?

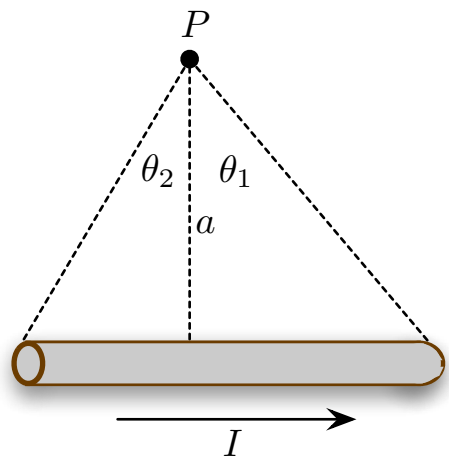

Solution

Beginning with the Biot-Savart Law, we write

$$\begin{aligned}
dB &= \frac{\mu_0}{4\pi}\frac{I|d\mathbf{s}\times\hat{\mathbf{r}}|}{r^2} \\
&= \frac{\mu_0 I}{4\pi r^2}dx\sin\left(\frac{\pi}{2}-\theta\right) \\
&= \frac{\mu_0 I}{4\pi r^2}dx\cos\theta \\
&= \frac{\mu_0 I}{4\pi}\frac{dx\cos^3\theta}{a^2} \\
&= \frac{\mu_0 I}{4\pi}\frac{d(\cancel{a}\tan\theta)\cos^3\theta}{a^{\cancel{2}}} \\
&= \frac{\mu_0 I}{4\pi}\frac{\cancel{\sec^2\theta}d\theta\cos^{\cancel{3}}\theta}{a} \\
&= \frac{\mu_0 I}{4\pi a}\cos\theta d\theta.
\end{aligned}$$

Integrating from $-\theta_2$ to θ_1, we have

$$\begin{aligned} B &= \frac{\mu_0 I}{4\pi a}\int_{-\theta_2}^{\theta_1} \cos\theta d\theta \\ &= \frac{\mu_0 I}{4\pi a}\sin\theta\Big|_{-\theta_2}^{\theta_1} \\ &= \frac{\mu_0 I}{4\pi a}[\sin\theta_1 - \sin(-\theta_2)] \\ &= \frac{\mu_0 I}{4\pi a}(\sin\theta_1 + \sin\theta_2). \end{aligned}$$

It is necessary to integrate from $-\theta_2$ to indicate that θ_1 and θ_2 are spanned by portions of the wire on either side of the perpendicular segment a.