1 Theory

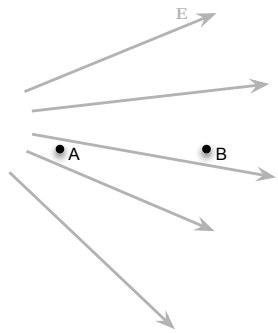

The two points A and B are located within a region in which there is an electric field **E**.

(a) How would you describe the potential difference $\Delta V = V_{\mathsf{B}} - V_{\mathsf{A}}$? (positive, $\boxed{\text{negative}}$, or zero)

(b) A negative charge is placed at A and then moved to B. How would you describe the change in potential energy of the charge-field system for this process? ($\boxed{\text{positive}}$, negative, or zero)

(c) Write the mathematical relationships between the change in potential ΔV, the change in potential energy ΔU, and the electric field **E**. This is equation **(25.3)** in Serway. *Hint: your answer will include the line integral*

$$\int_{\mathsf{A}}^{\mathsf{B}} \mathbf{E} \cdot d\mathbf{s}. \tag{1}$$

$$\boxed{\Delta V = \frac{\Delta U}{q_0} = -\int_{\mathsf{A}}^{\mathsf{B}} \mathbf{E} \cdot d\mathbf{s}}$$

2 Practice

Gauss' Law is

$$\Phi = \oint \mathbf{E} \cdot d\mathbf{A} = \frac{q_{\text{in}}}{\epsilon_0}. \tag{2}$$

Consider a surface charge density σ distributed over the entire xy plane (that is, infinite).

(a) Using a cylindrical Gaussian surface, show the steps for arriving at an expression for the electric field **E** at a distance z from the plane. Remember, your answer is a vector: it has a magnitude *and* a direction.

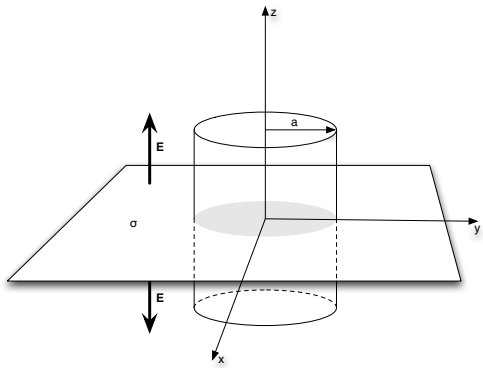

$$
\begin{aligned}
\oint \mathbf{E} \cdot a\mathbf{A} &= \frac{q_{\text{enclosed}}}{\epsilon_0} \\
E \oint dA &= \frac{\pi a^2 \sigma}{\epsilon_0} \\
E 2\cancel{\pi} \cancel{a^2} &= \frac{\cancel{\pi} \cancel{a^2} \sigma}{\epsilon_0} \\
E &= \frac{\sigma}{2\epsilon_0} \\
\mathbf{E} &= \boxed{\frac{\sigma}{2\epsilon_0}\mathbf{k}}.
\end{aligned}
$$

(b) Find $\mathbf{E}$ at a distance $-z$ from the plane.

$$\mathbf{E} = \boxed{-\frac{\sigma}{2\epsilon_0}\mathbf{k}}. \tag{3}$$

(c) What is the flux Φ through the entire cylindrical surface?

$$\Phi = \frac{q_{\text{enclosed}}}{\epsilon_0} = \boxed{\frac{\pi a^2 \sigma}{\epsilon_0}}. \tag{4}$$

(d) What are the four criteria for *easily* applying Gauss' Law to an electrostatics problem (i.e. what are four conditions which may simplify the integral $\oint \mathbf{E} \cdot d\mathbf{A}$?).

An appropriate Gaussian surface is one made up of component surfaces at which the electric field lines are either (1) normal or (2) parallel to the normal vectors of the surface, or (3) of constant magnitude, including (4) zero.